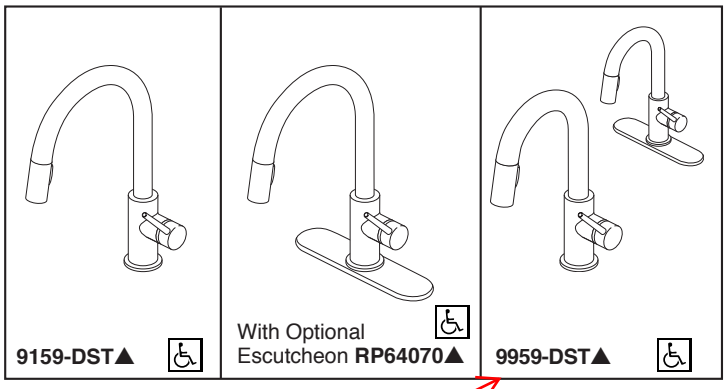

Submitted Model No.:_____

Specific Features:_____

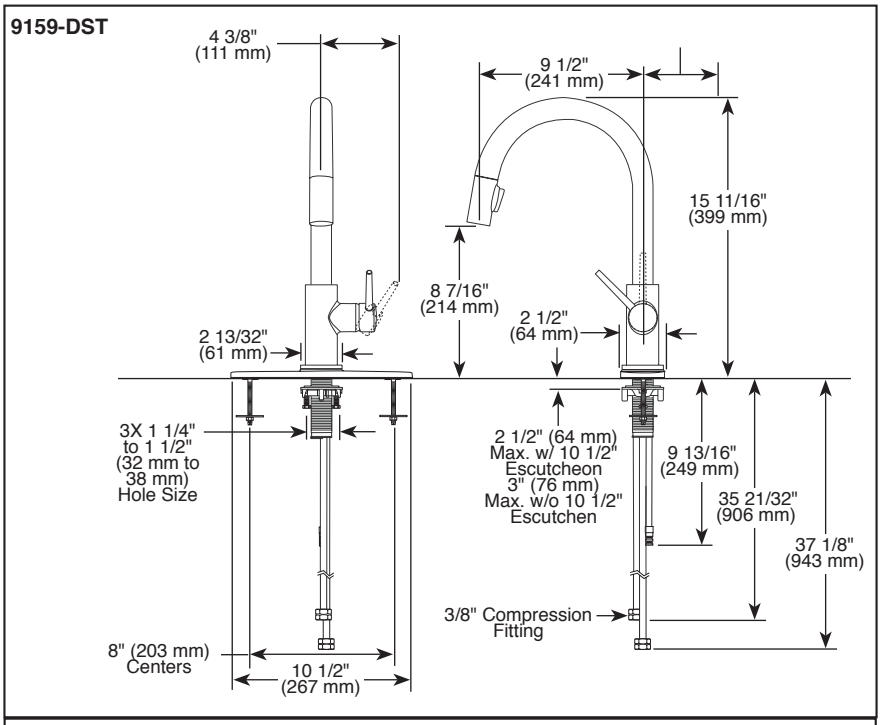

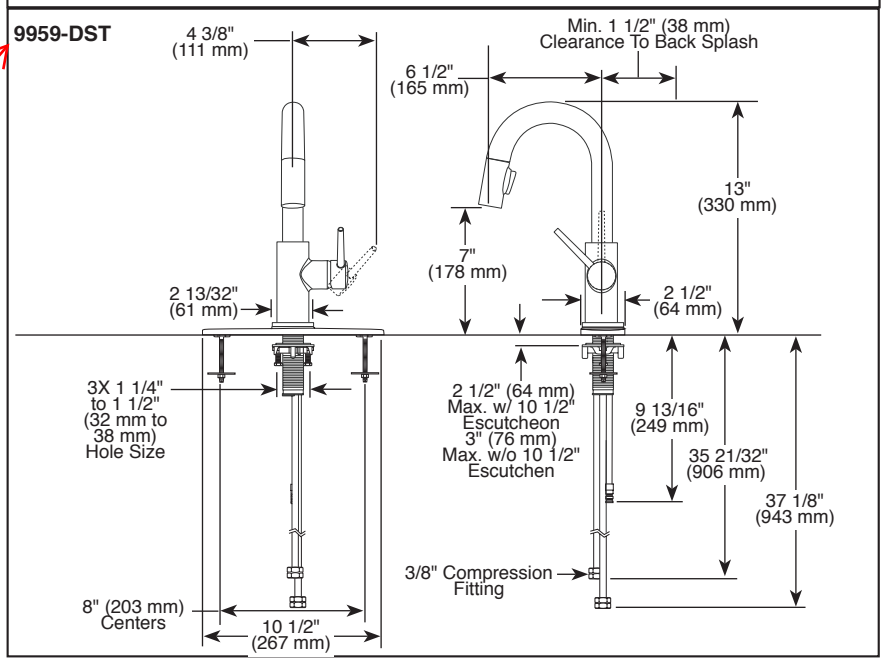

▲ Designate proper finish suffix

Delta reserves the right (1) to make changes in specifications and materials, and (2) to change or discontinue models, both without notice or obligation. Dimensions are for reference only. See current full-line price book or www.deltafaucet.com for finish options and product availability.

DSP-K-9159-DST Rev. E

KITCHEN FAUCETS

- Trinsic® Collection
- Single Handle Deck Mount
- 2-Function Pull-Down Sprayer
- Single or 3 Hole Sink Applications
- Centermount or 8" (203 mm) Centers w/ Optional 10 1/2 (267 mm) Escutcheon
- MagnaTite® Magnetic Docking

STANDARD SPECIFICATIONS:

- Single handle, 2-function pull-down kitchen faucets for exposed mounting on single or three hole sinks.
- Solid brass fabricated body.
- 15 11/16" (399 mm) high, 9 1/2" (241 mm) long, spout swings 360˚.
- Lever handle. Control mechanism shall be full-motion valve cartridge.
- Touch-Clean® sprayhead.
- Quick connect hoses.
- Pull-down wand operates in an aerated or spray mode via ergonomic buttons.
- Red/blue indicator on handle button to indicate hot/cold temperature.
- MagnaTite® magnetic docking.
- Dual integral check valves in sprayer.
- Mounting wrench to assist in tightening mounting nut securely.
- Hose travels inside mounting shank so it will not interfere with deck edges.
- Keyed 10 1/2" (267 mm) escutcheon to help alignment and aid installation.
- Maximum 1.80 gpm @ 60 psi, 6.8 L/min @ 414 kPa

WARRANTY

- Lifetime limited warranty on parts (other than electronic parts and batteries) and finishes: or, for commercial users, for 5 years from date of purchase.
- 5 year limited warranty on electronic parts (other than batteries); or, for commercial users, for 1 year from the date of purchase. No warranty is provided on batteries.

COMPLIES WITH:

- ASME A112.18.1 / CSA B125.1
- ASME A112.18.6
- Indicates compliance to ICC/ANSI A117.1
- Verified compliant with .25% weighted average Pb content regulations.

DELTA FAUCET COMPANY

55 E 111th Street, Indianapolis, Indiana 46280
350 South Edgeware Road, St. Thomas, ON N5P 4L1
© 2015 Masco Corporation of Indiana